BU90B
BU90DB & BU110DB

Undermount Rangehoods

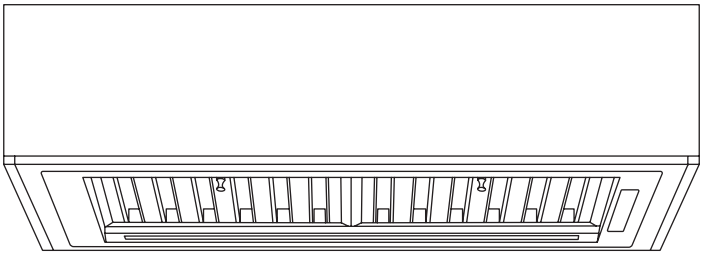

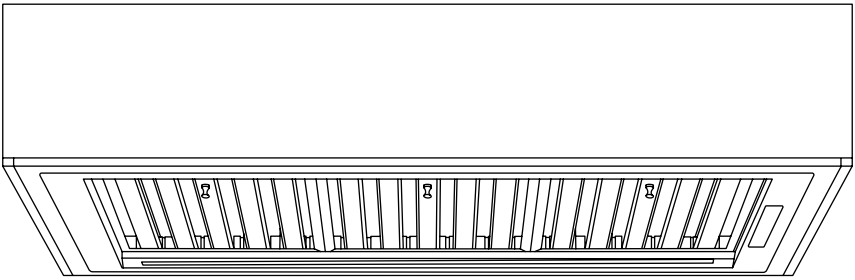

INSTRUCTION MANUAL

belling.com.au | belling.co.nz

PLEASE READ THE INSTRUCTION MANUAL CAREFULLY BEFORE USING THE UNIT

CONGRATULATIONS

Dear Customer,

Congratulations on the purchase of your new product from **Belling**.

We recommend you please take some time to read the instruction manual thoroughly to familiarise yourself with the functionality and operations to ensure optimum performance of your new appliance.

After reading the manual, please store it in a safe and accessible location for future reference.

Installation
The installation of your new appliance must be carried out by a qualified installer / technician in accordance to local regulations. Please ensure all packaging materials are disposed of correctly.

Customer Care
Our Customer Care centre is available should you wish to learn more about your appliance in relation to how to use it to its best potential, or tips on cleaning as well as available accessories.

For further details please contact our Customer Care Team

Australia
Ph: 1800 444 357
customer.care.ha@glendimplex.com.au

New Zealand
Ph: 09 274 8265
nztechserv@glendimplex.co.nz

Thank you.

Regards,

Belling Australia and New Zealand

CONTENTS

PRODUCT / INSTALLER DETAILS	**4**
WARNINGS & PRECAUTIONS	**5 - 6**
Warnings	5
Safety Precautions	6
Product Use	6
Unpacking	6
Disposal / Recycling of your Appliance	6
PRODUCT OVERVIEW	**7**
Product Overview	7
Included in the Box	7
OPERATION	**8**
Control Panel Overview	8
Operating the Rangehood	8
INSTALLATION	**9 - 13**
Electrical Connection	9
Rangehood Installation Height	9
Recommended Clearances	10
Ducting Options	10
Rangehood Installation	11 - 13
CARE & CLEANING	**14 - 15**
Cleaning the Rangehood	14
Removing the Filters	14
Cleaning the Filters	15
LED Lamps	15
TROUBLE SHOOTING	**16**
TECHNICAL SPECS	**17 - 18**
BU90B	17
BU90DB	17
BU110DB	18
MANUFACTURER GUARANTEE	**19 - 22**

Icon	Type	Meaning
	Warning	Serious injury or death risk
	Risk of electric shock	Dangerous voltage risk
	Symbol ISO 7010 W021	Warning; Risk of fire / flammable materials
	Caution	Injury or property damage risk
	Important / Note	Operating the system correctly

PRODUCT / INSTALLER DETAILS

For future reference we suggest that you staple a copy of your purchase receipt here and complete the below so the information is always at hand.

PRODUCT DETAILS

Model number: _____ Serial number: _____
(Located on the product rating label)

Description: _____

PURCHASE DETAILS

Date of purchase: _____

Place of purchase: _____

Store name: _____

Address: _____

Telephone: _____ Invoice / receipt number: _____

INSTALLATION DETAILS

Electrical Details

Date of installation: _____

Company / installers name: _____

Licence number: _____ Telephone number: _____

Plumbing Details

Date of installation: _____

Company / installers name: _____

Licence number: _____ Telephone number: _____

Carefully read all instructions before using your appliance and keep them in a convenient place for reference when necessary. CONDITIONS OF USE: This appliance is intended to be used for domestic use, not commercial use.

This rangehood must only be installed in accordance with the instructions provided. Incorrect installation may cause harm to persons, damage property and void the product's warranty. This rangehood complies the safety standard AS/ NZS60335.2.31 and AS/NZS 60335.1

WARNINGS

WARNING: all electrical work must be done in accordance with local and national electrical codes as applicable and should be undertaken by licensed and qualified persons only.

WARNING: this rangehood is designed for domestic household use only.

WARNING: this appliance is not intended to be used by children, or persons with reduced physical, sensory or mental capabilities, or lack of experience and knowledge, unless they have been given supervision or instruction concerning the use of the rangehood by a person responsible for their safety.

WARNING: young children should be supervised to ensure that they do not play with the appliance.

WARNING: you must read the instructions concerning the method and frequency of cleaning.

WARNING: there is a risk of fire if cleaning isn't carried out in accordance with the instructions.

WARNING: DO NOT check the status of the filters while the rangehood is operating.

WARNING: DO NOT touch bulbs or adjacent areas, during or straight after use.

CAUTION: accessible parts may become hot when used with cooking appliances.

WARNING: constantly check food frying, overheated oil may become a fire hazard.

WARNING: disconnect the electrical plug prior to any maintenance.

WARNING: never flambé under the rangehood.

WARNING: exhaust air must not be discharged into an existing flue which is used by other appliances for exhausting fumes.

WARNING: if the power supply cord of this rangehood is damaged in any way, it must only be replaced by one of our authorised service agents. Please call or email our customer service team for further assistance. Contact details can be found on the back of this user manual.

WARNING: your new rangehood is guaranteed against electrical or mechanical defects, subject to certain exclusions that are noted in the Warranty Terms and Conditions (at the rear of this user manual). The foregoing does not affect your statutory rights.

WARNING: the use of this rangehood for any other purpose or in any other environment, without our express agreement, will invalidate any warranty or liability claim.

WARNING: no modifications to the appliance are permitted.

WARNING: repairs may only be carried out by authorised service agents.

WARNING: cleaning of the rangehood should be carried out on a regular basis.

WARNINGS & PRECAUTIONS

SAFETY PRECAUTIONS

Take care when the rangehood is operating simultaneously with an open fireplace or burner that depend on natural ventilation as the rangehood removes air from the room, which a burner or fireplace may need for combustion.

Provide adequate ventilation for safe operation of the rangehood.

Follow any local laws that apply to external air evacuation.

Before connecting to the electricity network:

Look at the data plate (located inside the appliance) to ascertain that the voltage and power correspond to the available power supply and the power outlet is suitable. If in doubt, ask a qualified electrician.

If the appliance is used intensively for a long period of time, you may need to open a window to improve airflow.

The minimum distance between the cooktop hob and the lowest part of the rangehood shall be at least 65cm. If the instructions for installation of the gas hob specify a greater distance, this must be taken into account.

Regulation concerning the discharge of air has to be fulfilled.

60cm rangehoods can only be installed above hobs with 4 or less burners / elements.

90cm rangehoods can only be installed above hobs with 6 or less burners / elements.

PRODUCT USE

This rangehood is designed to be used in households and for non-commercial uses such as:

- Staff kitchen areas in shops, offices and other working environments.
- By clients in hotels, motels and other residential environments, excluding commercial kitchens.
- Bed and breakfast type environments.
- This rangehood is not designed for outdoor or alfresco installation.

UNPACKING

During transportation, protective packaging was used to protect the appliance against any damage. After unpacking, please dispose of all elements of packaging in a way that will not cause damage to the environment. Please dispose of materials responsibly.

⚠ **CAUTION:** during unpacking, the packaging materials (polythene bags, polystyrene pieces, etc.) should be kept out of reach of children

DISPOSAL / RECYCLING OF YOUR APPLIANCE

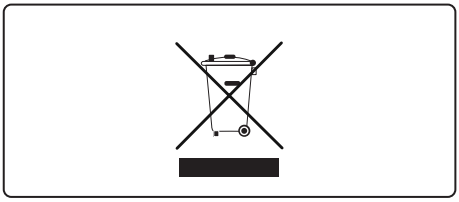

This symbol on the product or on its packaging indicates that this product should not be treated as household waste. Instead it should be handed over to the applicable collection point for the recycling of electrical and electronic equipment.

By ensuring this product is disposed of correctly, you will help prevent potential negative consequences for the environment and human health, which could otherwise be caused by inappropriate waste handling of this product.
For more detailed information about recycling of this product, please contact your local city office, your household waste disposal service or the retailer who you purchased this product from.

The Manufacturers and Importers / Distributors and Retailers shall not be liable to any legal liability, personal injury and property damage due to incorrect operation or incorrect Installation.

BU90B / BU90DB / BU110DB

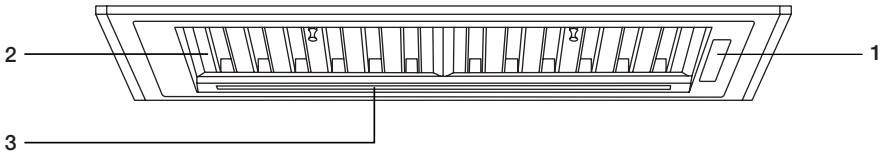

1. Control panel **2.** Baffle filters **3.** LED strip lighting

INCLUDED IN THE BOX

1x rangehood
1x user manual

Control Panel Overview

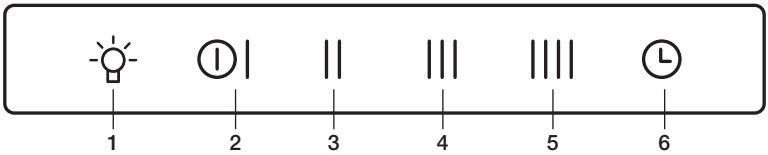

1. Light
2. Power / speed 1
3. Speed 2
4. Speed 3
5. Boost
6. Countdown timer

OPERATING THE RANGEHOOD

NOTE: it is recommended to start the rangehood prior to commencing to cook and leave the rangehood in operation for 10 minutes after cooking is finished in order to eliminate cooking vapours and odours. It is recommended to engage the countdown timer once you have finished cooking. This will clear the space of any residual smoke and smell and then turn the rangehood off after a period of 10 minutes.

1. Turn the rangehood on by touching the power /speed 1 ‘ ⏻I ’ indicator. The indicator will light up, operation will begin on speed 1.
2. To increase the speed, touch either the speed 2 ‘ II ’ or speed 3 ‘ III ’ indicators. When either speed setting is engaged, the indicator lights for the speed selected as well as the lower speeds will be shown.
3. To decrease the speed, touch either the speed 2 ‘ II ’ or speed 1 ‘ ⏻I ’ indicators. As the speed is decreased, the indicator lights for the higher selected speed will turn off.
4. When maximum extraction is required, the boost ‘ IIII ’ function can be engaged. This function can be selected regardless of what speed was previously selected. The boost ‘ IIII ’ function will run for 5 minutes, after this time the speed will revert to speed 3 ‘ III ’.
5. To operate the lights, touch the light ‘ -💡- ’ indicator. To switch off, touch the light ‘ -💡- ’ indicator again. The lights can also be turned on when the motor is not in operation.
6. To turn off the rangehood, push the power ‘ ⏻I ’ button and the motor will cease operation.

Setting the Countdown Timer

The rangehood features a countdown timer that will automatically turn off the motor and the lights after a set period. The timer has a fixed duration of 10 minutes.

1. Whilst the rangehood is switched on and the motor is running, touch the countdown timer ‘ 🕒 ’ indicator. The countdown timer ‘ 🕒 ’ indicator will light up.
2. After a period of 10 minutes, the motor and lights will turn off. To cancel the timer before the time elapses, touch the countdown timer ‘ 🕒 ’ indicator again and the light will go out.

ELECTRICAL CONNECTION

Assembly and electrical connections must be carried out by an authorised service agent.

The rangehood is fitted with a power cord and a 3-pin plug. Install the rangehood so that the plug is easily accessible.

Plug the 3- pin plug into a properly earthed, 10A general purpose power outlet.

If the supply cord is damaged, it must be replaced by the manufacturer or its service agent or a similarly qualified person in order to avoid a hazard.

The appliance has been manufactured as a class 1 therefore earth cable is necessary.

The connection to the mains is carried out as follow:

	IEC227
A = Active	Brown
N = Neutral	Blue
E = Earth	Green / Yellow

If not provided, connect a plug for the electrical load indicated on the description label. Where a plug is provided, the cooker hood must be installed so that the plug is easily accessible after installation.

An omni polar switch with a minimum aperture of 3mm between contacts, in line with the electrical load and local standards, must be placed between the appliance and the network in the case of direct connection to the electrical network.

IMPORTANT! In addition to the information this manual, please check all relevant state requirements for minimum-maximum mounting heights, as well as regulations regarding the extraction of air. Glen Dimplex is not liable if your rangehood is not installed in accordance with these legal requirements.

RANGEHOOD INSTALLATION HEIGHT

Minimum height from the cooktop surface to the underside face of the rangehood

- 600mm electric cooktop
- 650mm Gas cooktop*

*Measurement are from the top of the trivets, to the lowest part of the rangehood.

NOTE: if the instructions for the gas cooktop specify a greater distance, this must be taken into account.

RECOMMENDED CLEARANCES

Install the rangehood in accordance with the manufacturer's instructions. For optimum performance, we recommend that all rangehood clearances be a minimum of 650mm to a maximum of 750mm between the top of the cooking surface to the underside of the rangehood.

IMPORTANT! If the user / installer decides to install the rangehood at a distance of less than the minimum height above the cooking surface, Glen Dimplex declines responsibility for any damage suffered to the rangehood or surrounding cabinetry due to excess heat or steam.

If a connection flue composed of two parts is used, the upper part must be placed inside the lower part.

Exhaust air must not be discharged into a flue which is used for exhausting fumes from appliances burning gas or other fuels.

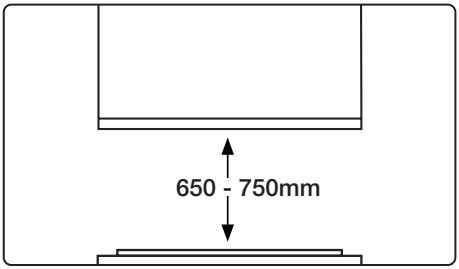

DUCTING OPTIONS

Before beginning the installation of your rangehood, the method of ducting should be determined. The guide to the right illustrates the various ducting options to be considered.

Further to the ducting options outlined, please follow the below tips to correctly duct your rangehood.

1. Use cylindrical ducting (not supplied) and ensure the diameter matches the rangehood outlet (150mm).
2. Avoid sharp 90 degree bends as much as possible, use 45 degree bends instead.
3. Always use non-flammable ducting (not supplied).
4. Do not duct into the celling space.
5. Always duct to the outside atmosphere.
6. A duct run longer than 5 metres will start to reduce the performance of the rangehood.

Ducting out through the roof

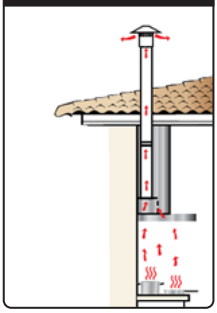

Ducting out through the wall

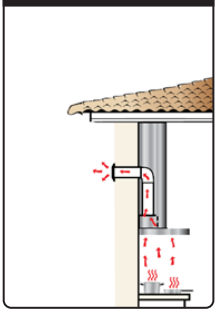

Ducting out through the eave

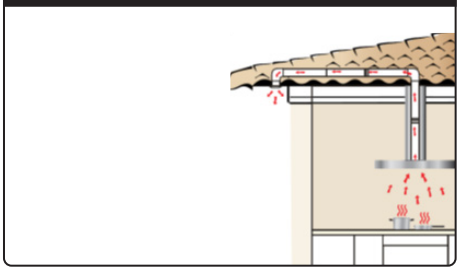

NOTE: ducting kits (not included) for the above installation scenarios, can be purchased separately through various retail and hardware stores.

RANGEHOOD INSTALLATION

Cutout Size

To ensure the correct fit for your rangehood in your cabinetry, use the below dimensions as a guide.
It is always best to send your rangehood to your cabinet maker to ensure the correct fit prior to installation.

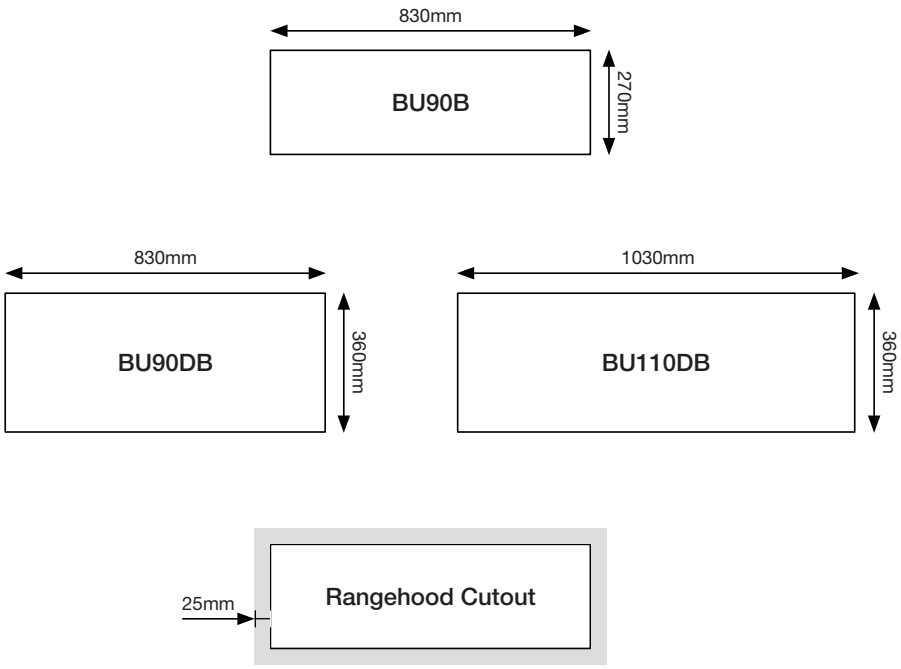

NOTE: for the rangehood to be adequately supported in the cabinet, we recommend a 25mm edge all the way round on the base board.

Mounting System

The Belling undermounts utilizes 4 spring loaded brackets for easy mounting into an overhead cabinet.

Using this system, the rangehood can be pushed into the cutout of the overhead cabinet and will be held in place until it's ready to be secured.

To tighten the spring toggle, use a Philips head screwdriver and turn in an anti clockwise direction.

To loosen the spring toggle, use a Philips head screwdriver and turn in a clockwise direction.

NOTE: the maximum thickness of melamine that the spring toggle can be clamped to is 25mm.

1. Remove the filters from rangehood by using two (2) hands to push each filter backwards until it clears the support channel at the front of the rangehood, then pivot down and out, **figure 1.**
2. Before installing into the overhead cabinet, ensure each spring bracket is at the maximum opening by turning the screw in a clockwise direction, **figure 2.**

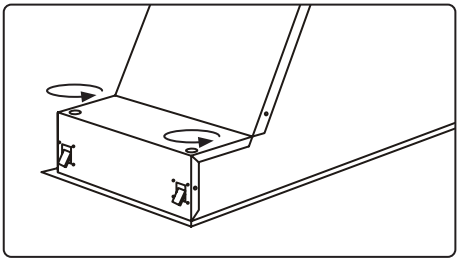

Figure 1

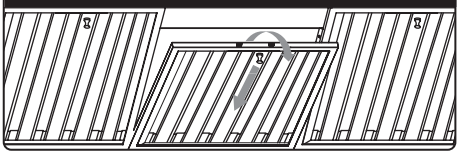

Figure 2

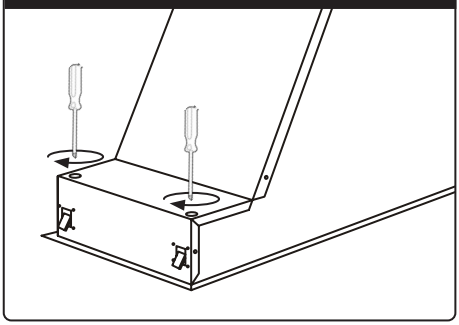

3. Bracing each side of the rangehood, lift-up and push into the cutout in the overhead cabinet, **figure 3.** Once the spring toggles clear the board at the bottom, they will spring out and hold the rangehood in place, ready for the next step, **figure 4.**

NOTE: ensure the rangehood is installed in the correct orientation by checking that the light panel is at the back.

Figure 3

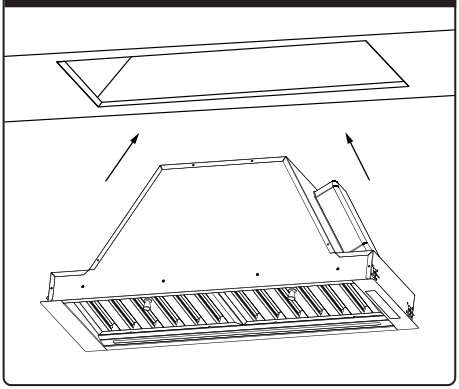

Figure 4

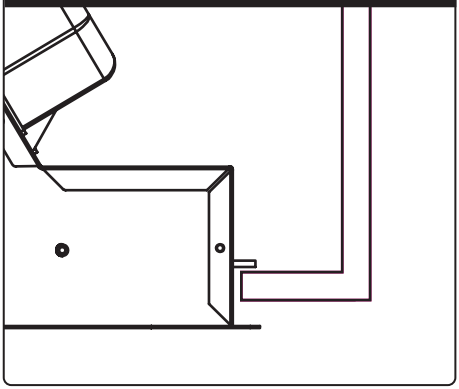

4. Close each of the four (4) spring brackets 50% of the way by turning the screws anti-clockwise. Once all 4 spring brackets are at the halfway mark, repeat the process for each bracket until the lip of the rangehood meets the underside of the cabinet and sits flush, **figure 5.**

5. Feed the ducting down from the ceiling and connect onto the outlet of the rangehood using duct tap or a cable tie.

Figure 5

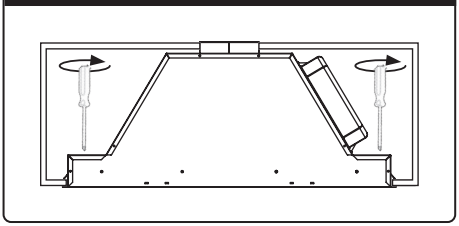

NOTE: ensure the ducting is pulled tight and there is minimal excess between the outlet of the rangehood and the entry point at the ceiling.

6. Plug in the rangehood to a pre-existing GPO. If a GPO is required ensure one is installed by a qualified electrician and is placed within cupboard.

CLEANING THE RANGEHOOD

To ensure the rangehood continues to operate effectively, regular maintenance and cleaning is required.

Before maintenance or cleaning is carried out, the cooker hood should be disconnected from the mains power supply. Ensure that the cooker hood is switched off at the wall socket and the plug removed.

Clean the internal surfaces of rangehood, in particular each side of the motor and around the perimeter and channel that the filters sit in. The recommended detergent is a solution of water and a neutral liquid soap.

It is very important for the liquid soap to not contain granules that could scratch the surface.

Apply the solution to a soft cloth and then rub the cloth over the rangehood. It is important to follow the direction of the surface with the cloth.

Do not pour any liquid directly on to the rangehood.

The cloth must have no buttons, zips or fasteners that could scratch the surface.

Chemical solvents, aggressive, grainy or abrasive products, naphtha, alcohol or similar products that could damage the surface of the rangehood should not be used.

The manufacturer will not be held responsible for functional or aesthetic damage caused by cleaning with products which are not suitable or using inadequate cleaning methods.

REMOVING THE FILTERS

1. Ensure the baffles are cold before removing to ensure oil deposits do not spill.
2. To remove, use two (2) hands to push the filter to the back of the rangehood and once the front of the filter is clear of the support, pivot it down and out. Repeat for the remaining filters.
3. Once clean and completely dry, replace by reversing the above instructions.

Spring toggles sit in the channel and the filter needs to pushed backward and then manoeuvred down and out.

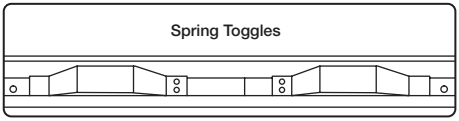

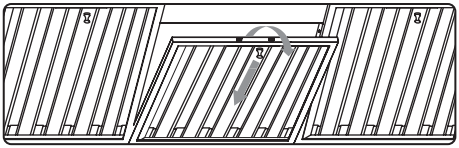

CLEANING THE FILTERS

The baffle filters capture the grease particles from the air extracted, and are therefore subject to build up and should be cleaned regularly to ensure optimal efficiency.

In order to prevent fire hazard, it is recommendable to clean the filter at a minimum of every two (2) months by carrying out the following instructions:

1. Remove the filters from the rangehood and wash them in a solution of water and neutral liquid detergent, leaving to soak.
2. Rinse thoroughly with warm water and leave to dry.

The filters may also be washed in the dishwasher and should be placed vertically so all grease and by-product is thoroughly washed away.

If the dishwasher method is selected, the following parameters should be met in order to achieve sufficient cleaning:

1. The bottom basket is utilised.
2. Filters are placed within the plate holders, so they sit upright during the wash cycle.
3. Select a heavy-duty wash program with a water temperature of 65 degrees or more.

LED LAMPS

- LED lamp assemblies are a spare part and are not repairable or replaceable by the customer.
- If an LED lamp fails, it must be replaced by a suitably qualified technician.
- Please contact Glen Dimplex after sales service via the details on the back of this user manual for any service enquires.

TROUBLE SHOOTING

Before booking a service call, read the trouble shooting guide below, for more information on guarantee and service conditions, please contract local dealer.

Problem	Possible causes	What to do
Lights on but motor is not working	Motor has failed	Contact service agent
	Possible PCB issue	Contact service agent
	Fan is obstructed	Disconnect power and clear obtrusions
Light and motor not working	House fuses blown	Reset / replace fuses
	Mains power cable is loose or disconnected	Refit mains power cable to power outlet. Switch power outlet on
Lights not working	Broken or faulty LED(s)	Contact service center
Insufficient suction	The distance between the rangehood and the cooktop is too far	Refit the rangehood to the correct distance. A gap between 650-750mm is recommended
	Current speed is not providing enough extraction for what is being cooked	Increase speed as required
	Ducting is obstructed or not vented to the outside atmosphere	Check ducting is pulled tight and there are minimal bends and it is exiting the external roof

Only service centers should carry out servicing. Otherwise warranty may be void.

BU90B

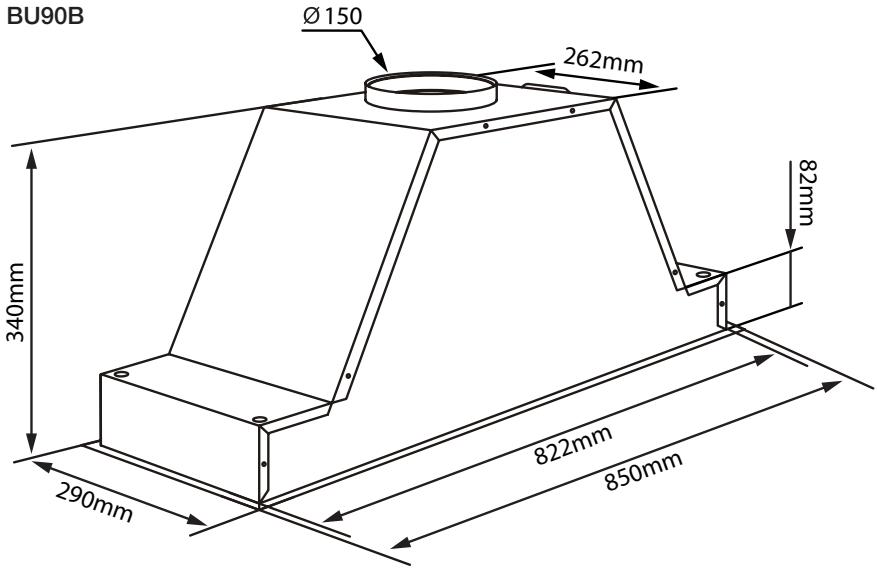

BU90DB

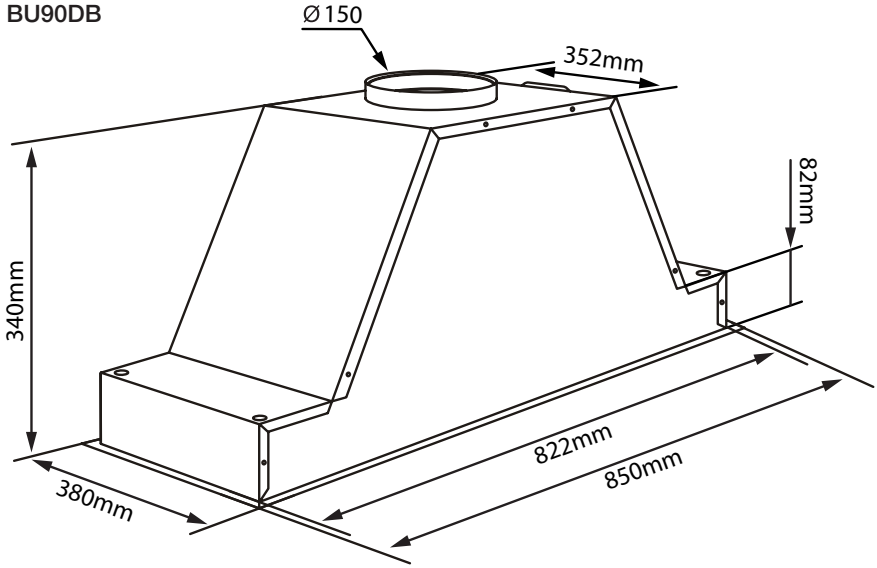

TECHNICAL SPECS

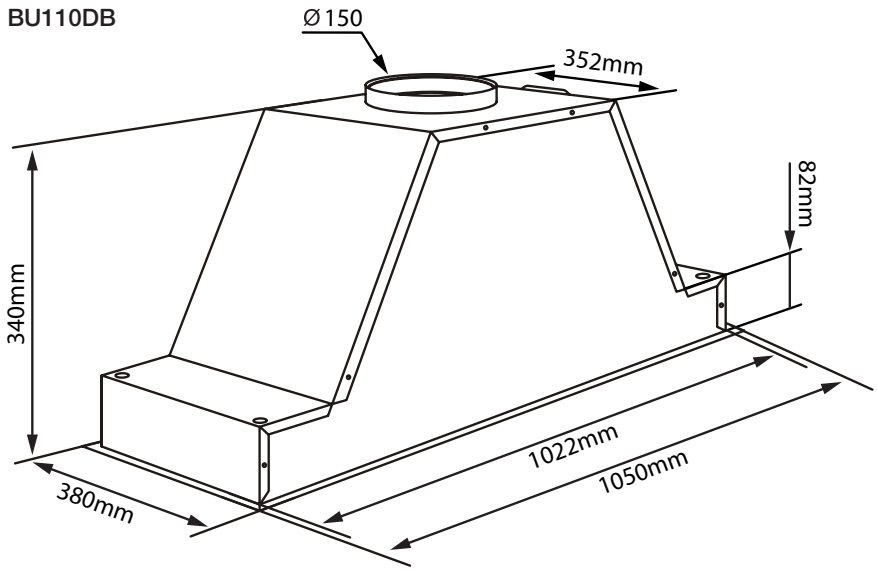

Model	BU90B	BU90DB	BU110DB
Duct outlet size (mm)	150	150	150
Extraction	1000m³/h	1000m³/h	1000m³/h
Filter qty. & type	2x baffle filters	2x baffle filters	3x baffle filters
Voltage (V)	220 - 240	220 - 240	220 - 240
Frequency (Hz)	50	50	50
LED power (W)	6	6	6
Motor	BLDC Motor	BLDC Motor	BLDC Motor
Motor power (W)	220	220	220
Total power (W)	226	226	226
Power connection	10A Plug	10A Plug	10A Plug
Power cord length (m)	1.7	1.7	1.7
Package dimensions (W x D x H mm)	910 x 360 x 415	910 x 450 x 415	1110 x 450 x 415
Product dimensions (W x D x H mm)	850 x 290 x 340	850 x 380 x 340	1050 x 380 x 340
Gross weight (Kg)	13.5	14.5	17.5
Net weight (Kg)	10.5	11.3	14.0

Contact our Customer Care Team

Glen Dimplex Australia Pty Ltd

Ph: 1800 444 357
customer.care.ha@glendimplex.com.au

Glen DImplex New Zealand Ltd

Ph: 09 274 8265
nztechserv@glendimplex.co.nz

MANUFACTURER GUARANTEE

This warranty is provided in Australia by Glen Dimplex Australia Pty Limited ABN 69 118 275 460 **(Phone number 1300 556 816)** and in New Zealand by Glen Dimplex New Zealand Limited NZBN 9429000069823 **(Phone number 09 274 8265)** in respect of the **Belling** product.

1. Belling Express Warranty

Subject to the exclusions below, we warrant that the product will not have any electrical or mechanical breakdowns within:

a) In the case of Belling products used for personal, domestic or household purposes, a period of 5 years from the date the product is purchased as a brand-new product from a retailer located in Australia / New Zealand.

b) In the case of Belling products used for purposes other than personal, domestic or household purposes (including business or commercial use), a period of 90 days from the date the product is purchased as a brand-new product from a retailer located in Australia / New Zealand. Belling products are designed and intended for domestic use only; and

c) All warranty repairs must be carried out by Glen Dimplex or their nominated service agent.

Note: warranty periods detailed above may vary in line with agreements with select retail and builder partners and may differ between Australia and New Zealand.

The benefits conferred by this express warranty are in addition to the Consumer Guarantees referred to in section 3 and any other statutory rights you may have under the Australian / New Zealand Consumer Law and/or other applicable laws.

2. Warranty exclusions

This express warranty does not apply where:

a) The product has been installed, used or operated otherwise than in accordance with the product manual or other similar documentation provided to you with the product;

b) The product requires repairs due to damage resulting from accident, misuse, incorrect installation, insect or vermin infestation, improper liquid spillage, cleaning or maintenance, unauthorised modification, use on an incorrect voltage, power surges and dips, voltage supply problems, tampering or unauthorised repairs by any persons, use of defective or incompatible accessories or exposure to abnormally corrosive conditions, events independent of human control which occurred after the goods left the control of Glen Dimplex;

c) The repair relates to the replacement of consumable parts such as fuses and bulbs or any other parts of the product which require routine replacement;

d) You are unable to provide us with reasonable proof of purchase for the product;

e) the breakdown occurs after the expiry of the express warranty period set out in section 1 or;

f) the product was not purchased in Australia / New Zealand as a brand-new product.

3. Consumer guarantees

Our goods come with guarantees that cannot be excluded under the Australian / New Zealand Consumer Law. You are entitled to a replacement or refund for a major failure and for compensation for any other reasonably foreseeable loss or damage. You are also entitled to have the goods repaired or replaced if the goods fail to be of acceptable quality and the failure does not amount to a major failure.

4. How to make a claim

You may make a claim under this warranty through our website, contacting our customer care line or via email. Contact details for Glen Dimplex Australia and New Zealand can be found at the end of this document.

To make a valid claim under this warranty, you must:

a) Lodge the claim with us as soon as possible and no later than 14 days after you first become aware of the breakdown;

b) Provide us with the product serial number;

c) Provide us with reasonable proof of purchase for the product. This can take the form of a store receipt, new home handover form or other payment receipt documentation; and

d) If required by us, provide us (or any person nominated by us) with access to the premises at which the product is located at times nominated by us (so that we can inspect the product).

5. Warranty claims

If you make a valid claim under this warranty and none of the exclusions set out in section 2 apply, we will, at our election, either repair the product or replace the product with a product of identical specification (or where the product is superseded or no longer in stock, with a product of as close a specification as possible).

Goods presented for repair may be replaced by refurbished goods of the same type rather than being repaired. Refurbished parts may be used to repair the goods. Products are designed and supplied for normal domestic use. We will not be liable to you under this warranty for business loss or damage of any kind whatsoever.

Contact our Customer Care Team

Glen Dimplex Australia Pty Ltd

Ph: 1800 444 357
customer.care.ha@glendimplex.com.au
www.glendimplex.com.au

Glen Dimplex New Zealand Ltd

Ph: 09 274 8265
nztechserv@glendimplex.co.nz
www.glendimplex.co.nz

READ THE INSTRUCTION BOOKLET BEFORE INSTALLING AND USING THE APPLIANCE.

The manufacturer will not be responsible for any damage to property or to persons caused by incorrect installation or improper use of the appliance. The manufacturer is not responsible for any inaccuracies, due to printing or transcription errors, contained in this manual. In addition, the appearance of the figures reported is also purely indicative.

The manufacturer reserves the right to make changes to its products when considered necessary and useful, without affecting the essential safety and operating characteristics. Glen Dimplex constantly seeks ways to improve the specifications and designs of their products. Whilst every effort is made to produce up to date literature, this document should not be regarded as an infallible guide. Actual product only should be used to derive cut out sizes.

All appliances must be installed by a qualified person/s with adherence to the relevant electrical, plumbing and building codes, with compliance being issued as required by state or national legislation.

Additionally, all upright cookers must have the anti-tilt device installed correctly in adherence to the relevant standards by a licenced installer.

For maximum effectiveness and efficiency all rangehoods should be installed with the use of ductwork, by a licenced installer with adherence to the relevant state and national building codes and regulations.

All Glen Dimplex appliances are for Domestic use only, and must be installed by a licenced installer into Domestic Applications only, without exception and to the required Authorities guidelines. Any installation outside of this will **VOID** warranty. Alfresco areas are not a Domestic application.

belling®

Distributed by

Glen Dimplex Australia Pty Ltd

Ph: 1800 444 357
customer.care.ha@glendimplex.com.au

Glen Dimplex New Zealand Ltd

Ph: 09 274 8265
nztechserv@glendimplex.co.nz

For service advice, please contact the Customer Care Centre by phone or email above.

For full terms and conditions, or to register your product warranty, please visit our website:

www.glendimplex.com.au www.glendimplex.co.nz

VERSION 1 REVISION 20231117

belling®

belling.com.au | belling.co.nz