CARE 500 WALL HUNG BASIN/SHROUD INSTALLATION INSTRUCTIONS
PLEASE READ CAREFULLY BEFORE INSTALLATION

IMPORTANT
Provide suitable reinforcement behind finished wall for the basin D.200 Fixing Kit at the fixing height position.

Note: Suitable for installation to comply to Australian Standard AS 1428.1-2009 Amendment No.1 Design for access and mobility.
See Caroma Care Technical Manual for roughing in and setout details.

Roughing in for D.200 Basin Fixing Kit:
For timber stud walls, noggins and studs must be positioned at a height to allow for the location of fasteners as detailed in **Fig. 1**.

BASIN INSTALLATION WITH D.200 BASIN FIXING KIT

1- Mark Fixing Screw hole position on finished wall at the recommended height as detailed in **Fig. 1**.

2- *For masonry wall installation:* Drill two Ø12mm holes for Expansion Fasteners.
For timber stud wall installation: Drill two Ø8mm holes for Fixing Screws.

3- Insert Expansion Fasteners into the drilled holes in masonry wall. The Fixing Screws should be screwed into the wall using the flat section of the Fixing Screw with a spanner as shown in **Fig. 2**. Allow 43 mm of thread to protrude from the finished wall.

4- Locate basin onto the Fixing Screws on the wall. Insert Plastic Bushes, Metal Washers and fasten to wall with Fixing Nut to complete assembly as detailed in **Fig. 3**.

5- The Plastic Bush allows for leveling adjustment if required by rotating the hexagonal head bush, the basin will be slightly raised or lowered as shown in **Fig. 3**.

6- Fit taps and waste assembly to the basin.

7- Tighten Fixing Nuts and connect plumbing to complete the installation.

OPTIONAL SHROUD
SHROUD INSTALLATION

1- Fix the D.87 Shroud Fixing Bracket (supplied) to the wall, as detailed in **Fig. 4.**

2- Ensure basin is secured and plumbing is connected.

3- Gently position the shroud into position beneath the basin and locate the Plastic Fixing Sleeves (supplied) into the holes each side of the shroud. Screw the Fixing Studs into the D.87 Shroud Fixing Bracket and tighten with a Allen key (not supplied) to mount the shroud to the wall.

IMPORTANT: DO NOT OVER TIGHTEN, AS THIS MAY CRACK THE SHROUD SIDE.

4- Check shroud is level and secured against basin. Snap on Plastic Cap (supplied).

Wall Hung Basin
D.200 Basin Fixing Kit

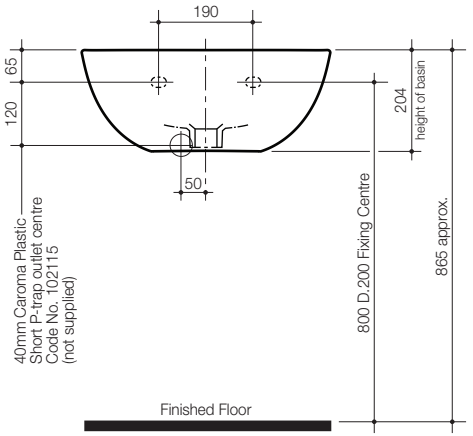

Note: Suitable for installation to comply to Australian Standard AS 1428.1-2009 Amendment No.1 Design for access and mobility.
See Caroma Care Technical Manual for roughing in and setout details.

Fig. 1

IMPORTANT:

Fixing Screw Masonry Walls Installation

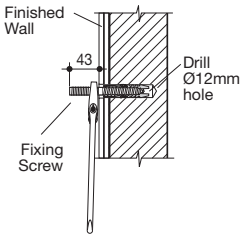

Fixing Screw Timber Stud Walls Installation

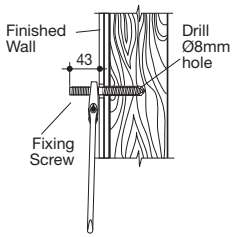

D.200 Basin Fixing Kit

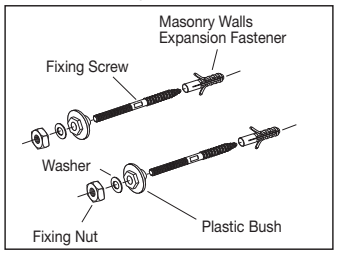

Fig. 2

D.200 Basin Fixing Kit
Completed Installation

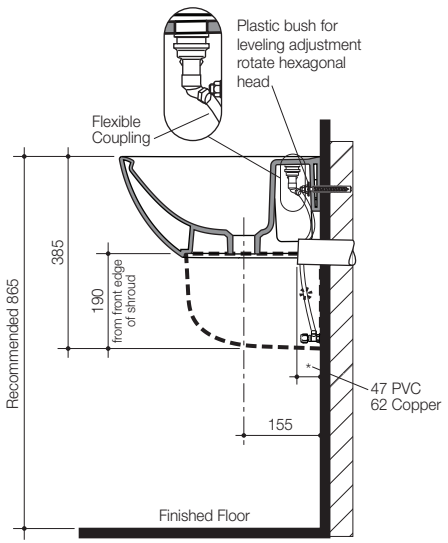

Fig. 3

Shroud Fixing

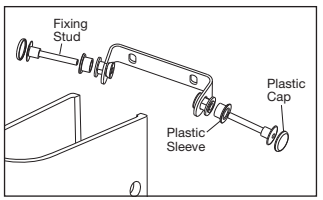

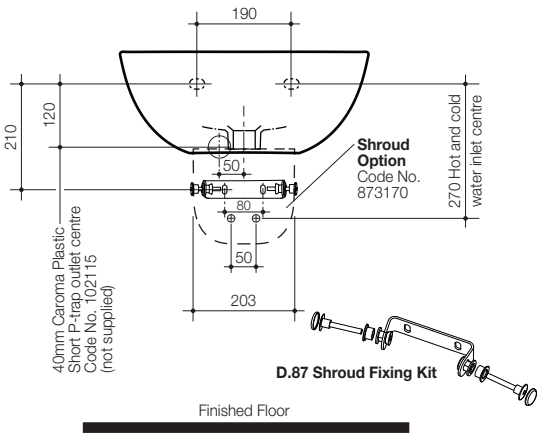

Fig. 4

All measurements are subject to accepted manufacturing tolerances. To ensure accuracy please check actual product dimensions before drilling for installation.
The manufacturer reserves the right to change specifications at any time without giving prior notification. This product should be installed by a qualified plumber.
Local authority, Water Board, and Building Regulations may apply to the installation of this product, and you should consult the appropriate bodies on these requirements.

Date of Issue: 19.09.14
Issue No: 1